Item	Description	Qty
1.	50mm Mesh Drum	1
2.	Removable outer mesh, 12 or 25mm	4

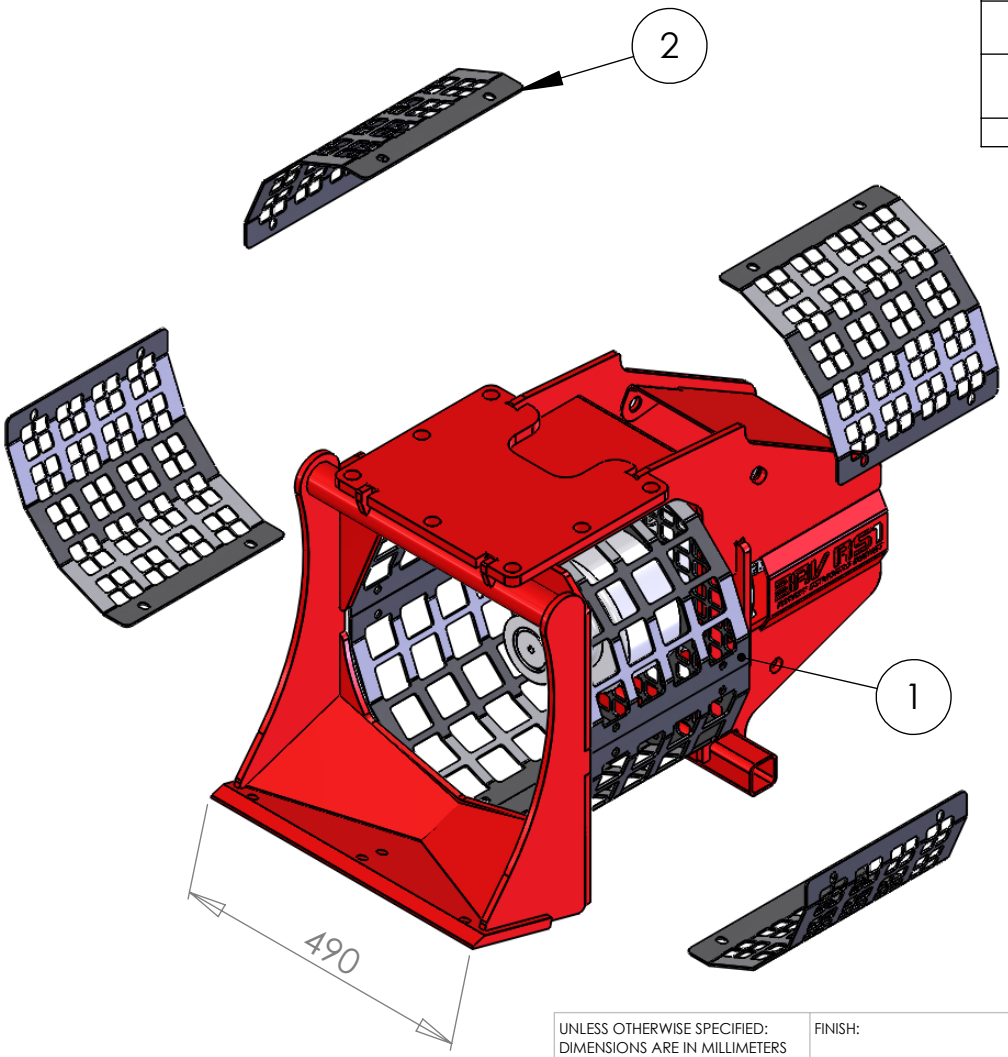

UNLESS OTHERWISE SPECIFIED:
DIMENSIONS ARE IN MILLIMETERS
SURFACE FINISH:
TOLERANCES:
LINEAR:
ANGULAR:

FINISH:

DEBUR AND BREAK SHARP EDGES

DO NOT SCALE DRAWING

REVISION

	NAME	SIGNATURE	DATE
DRAWN			23 October 2013 16:29:30
CHK'D			
APPV'D			
MFG			
Q.A			

TITLE:

MATERIAL:

DWG NO.

BAV-RS1_exploded exploded

A4

WEIGHT:

SCALE:1:20

SHEET 1 OF 1